SPM0437HD4H-B

Digital SiSonic™ Microphone

The SPM0437HD4H-B is a miniature, high-performance, low power, top port silicon digital microphone with a single bit PDM output. Using Knowles' proven high performance SiSonic™ MEMS technology, the SPM0437HD4H-B consists of an acoustic sensor, a low noise input buffer, and a sigma-delta modulator. These devices are suitable for applications such as cellphones, smart phones, laptop computers, sensors, digital still cameras, portable music recorders, and other portable electronic devices where excellent wideband audio performance and RF immunity are required.

Features:

- Low Current
- PDM Output
- Ultra-Stable Performance
- Standard SMD Reflow
- Omnidirectional

©2013 Knowles Electronics

1. ABSOLUTE MAXIMUM RATINGS

Parameter	Absolute Maximum Rating	Units
V_{DD}, DATA to Ground	-0.3, +5.0	V
CLOCK to Ground	-0.3, +5.0	V
SELECT to Ground	-0.3, +5.0	V
Input Current	±5	mA
Short Circuit Current to/from DATA	Indefinite to Ground or V_{DD}	sec
Temperature Range	-40 to +100	°C

Stresses exceeding these "Absolute Maximum Ratings" may cause permanent damage to the device. These are stress ratings only. Functional operation at these or any other conditions beyond those indicated under "Acoustic & Electrical Specifications" is not implied. Exposure beyond those indicated under "Acoustic & Electrical Specifications" for extended periods may affect device reliability.

2. ACOUSTIC & ELECTRICAL SPECIFICATIONS

TEST CONDITIONS: 23 ±2°C, 55±20% R.H., V_{DD}=1.8 V, F_{CLOCK}=2.4 MHz, SELECT pin is grounded, no load, unless otherwise indicated

Parameter	Symbol	Conditions	Min	Typ	Max	Units
Supply Voltage[1]	V_{DD}		1.6	-	3.6	V
Supply Current[1,2,3]	I_{DD}		-	380	500	µA
Sleep Current[3]	I_{SLEEP}	F_{CLOCK} < 1 kHz	-	6	10	µA
Sensitivity[1]	S	94 dB SPL @ 1 kHz	-29	-26	-23	dBFS
Signal to Noise Ratio	SNR	94 dB SPL @ 1 kHz, A-weighted		57.5	-	dB(A)
Total Harmonic Distortion	THD	94 dB SPL @ 1 kHz, S = Typ	-	.5		%
Acoustic Overload Point	AOP	10% THD @ 1 kHz, S = Typ	-	119	-	dB SPL
Power Supply Rejection Ratio	PSRR	200 mVpp sinewave @ 1 kHz	-	51	-	dBV /FS
Power Supply Rejection	PSR	100 mVpp square wave @ 217 Hz, A-weighted	-	-80	-	dBFS (A)
DC Output		Fullscale = ±100	-	-6	-	% FS
Directivity			Omnidirectional			
Polarity		Increasing sound pressure	Decreasing density of 1's			
Data Format			½ Cycle PDM			
Logic Input High	V_{IH}		0.65xV_{DD}	-	3.6	V

©2013 Knowles Electronics

Parameter	Symbol	Conditions	Min	Typ	Max	Units
Logic Input Low	V_{IL}		-0.3	-	$0.35xV_{DD}$	V
Logic Output High	V_{OH}	I_{OUT} = 2 mA	$0.7xV_{DD}$	-	V_{DD}	V
Logic Output Low	V_{OL}	I_{OUT} = 2 mA	0	-	$0.3xV_{DD}$	V
SELECT (high)			V_{DD} -0.2	-	3.6	V
SELECT (low)			-0.3	-	0.2	V
Short Circuit Current	I_{SC}	Grounded DATA pin	2	-	10	mA
Output Load	C_{LOAD}		-	-	160	pF
Clock Frequency	F_{CLOCK}		1.0	-	3.25	MHz
Clock Duty Cycle			40	-	60	%
Clock Rise/Fall Time	t_{EDGE}		-	-	10	ns
Fall-asleep Time[4,5]		F_{CLOCK} < 1 kHz	-	-	10	ms
Wake-up Time[4,6]		F_{CLOCK} ≥ 1 MHz	-	-	20	ms
Delay Time for Valid Data	t_{DV}	No load for min t_{DV}	18	-	125	ns
		Max C_{LOAD} for max t_{DV}				
Delay Time for High Z	t_{DZ}		0	-	16	ns

[1] 100% tested.

[2] I_{DD} varies with C_{LOAD} according to: $\Delta I_{DD} = 0.5*V_{DD}*\Delta C_{LOAD}*F_{CLOCK}$.

[3] Maximum specifications are measured at maximum V_{DD}. Typical specifications are measured at standard test conditions.

[4] Valid microphones states are: Powered Down Mode (mic off), Sleep Mode (low current, DATA = high-Z, fast startup), and Active Mode (normal operation).

[5] Time from F_{CLOCK} < 1 kHz to I_{SLEEP} specification is met when transitioning from Active Mode to Sleep Mode.

[6] Time from F_{CLOCK} ≥ 1 MHz to all applicable specifications are met when transitioning from Sleep Mode to Active Mode.

©2013 Knowles Electronics

3. MICROPHONE STATE DIAGRAM

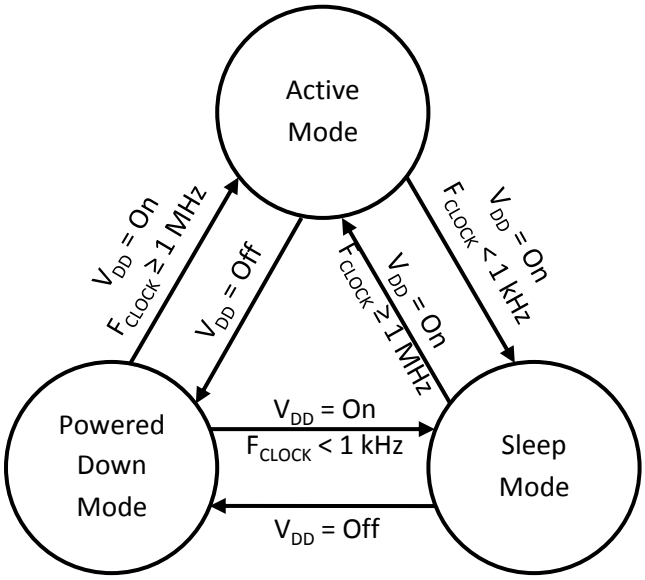

©2013 Knowles Electronics

4. FREQUENCY RESPONSE CURVE

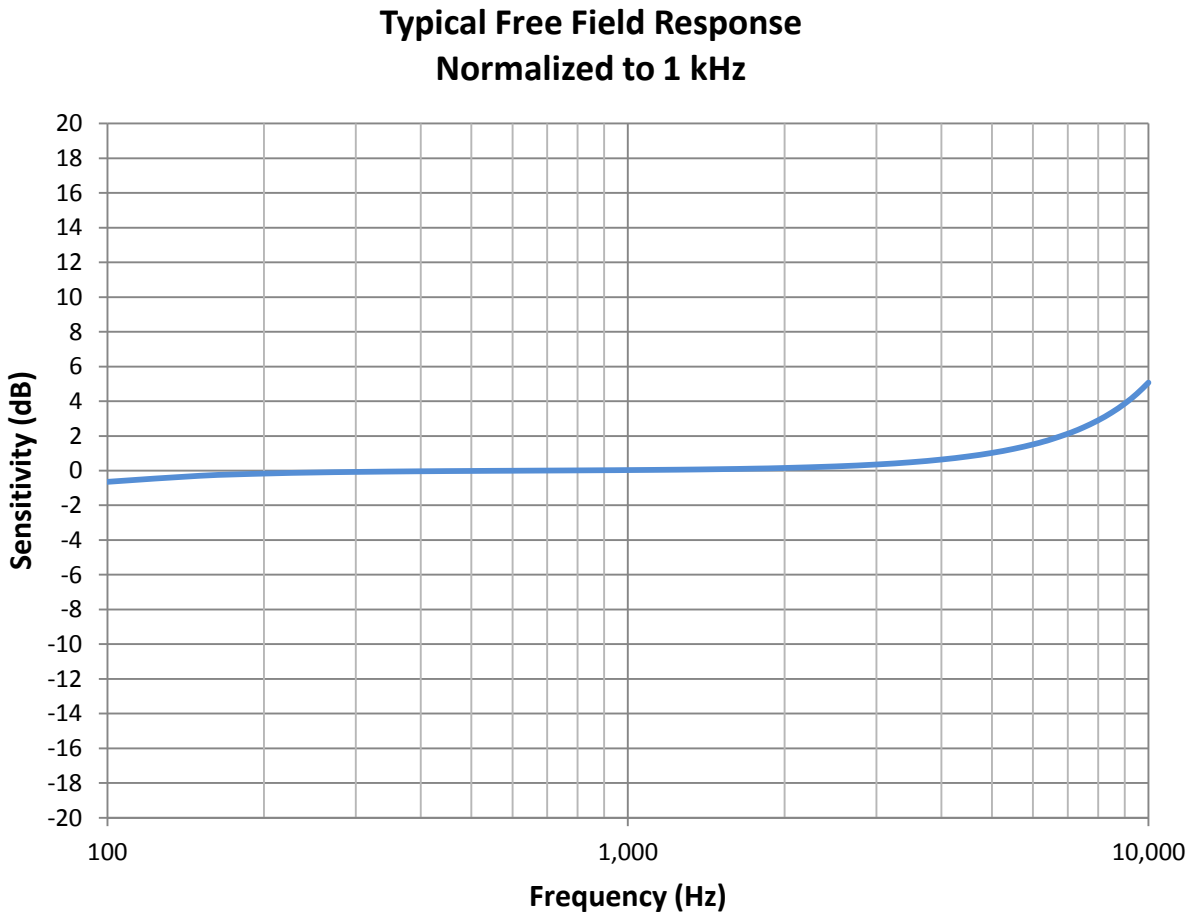

©2013 Knowles Electronics

5. INTERFACE CIRCUIT

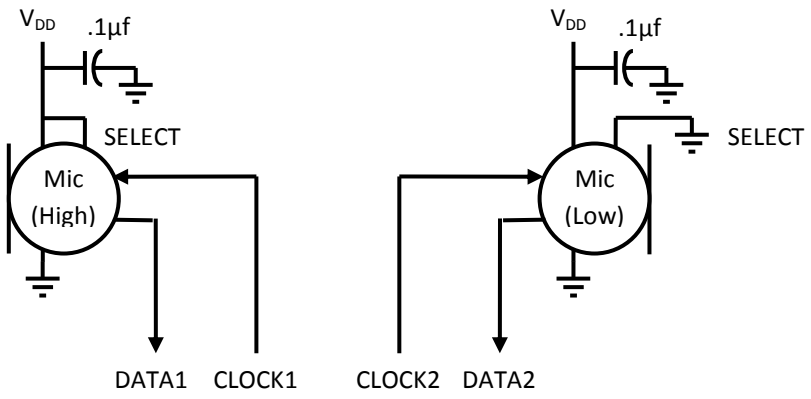

Microphone	SELECT	Asserts DATA On	Latch DATA On
Mic (High)	V_{DD}	Rising Clock Edge	Falling Clock Edge
Mic (Low)	GND	Falling Clock Edge	Rising Clock Edge

Note: All Ground pins must be connected to ground.
Bypass Capacitors near each mic on Vdd are recommened to provide maximum SNR performance.
Capacitors near the microphone should not contain Class 2 dielectrics.
Detailed information on acoustic, mechanical, and system integration can be found in the latest *SiSonic™ Design Guide* application note.

6. TIMING DIAGRAM

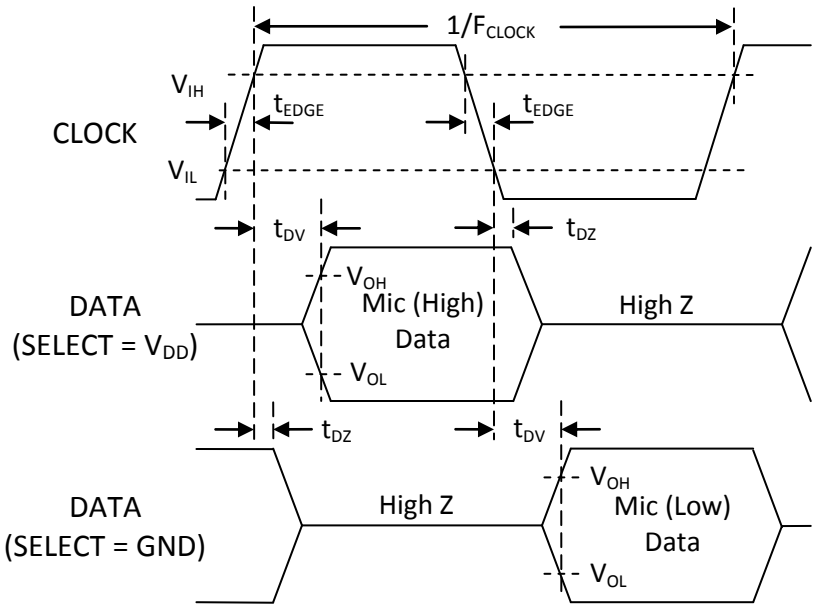

©2013 Knowles Electronics

7. MECHANICAL SPECIFICATIONS

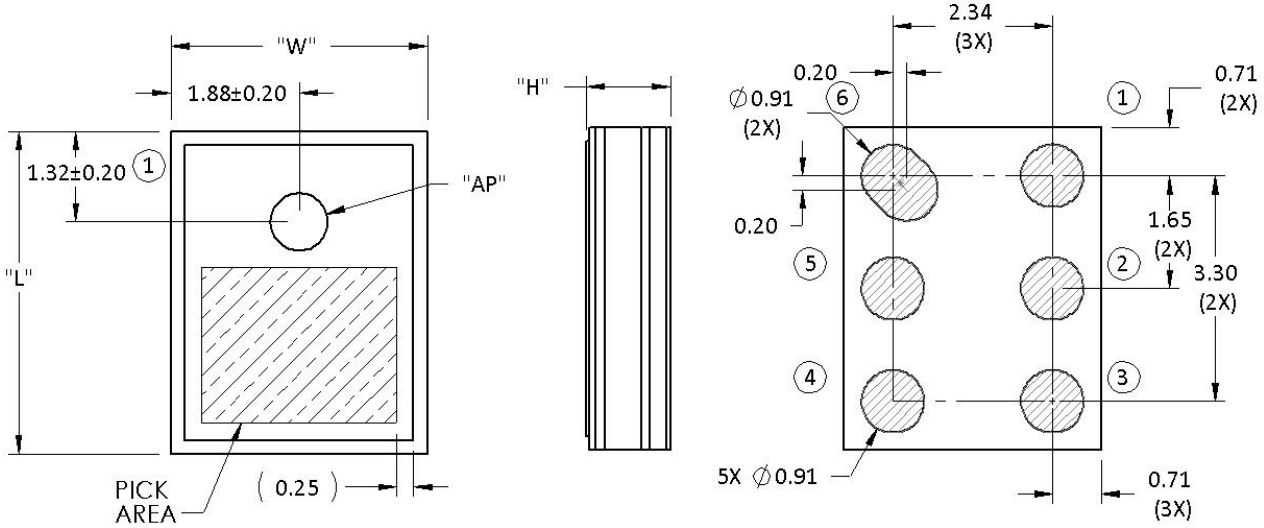

Item	Dimension	Tolerance
Length (L)	4.72	±0.10
Width (W)	3.76	±0.10
Height (H)	1.25	±0.10
Acoustic Port (AP)	Ø0.84	±0.08

Pin #	Pin Name	Type	Description
1	GROUND	Power	Ground
2	SELECT	Non-Digital Input	Lo/Hi (L/R) Select This pin is internally pulled low.
3	GROUND	Power	Ground
4	CLOCK	Digital I	Clock Input
5	DATA	Digital O	PDM Output
6	V_{DD}	Power	Power Supply

Notes: Pick Area only extends to 0.25 mm of any edge or hole unless otherwise specified.
Dimensions are in millimeters unless otherwise specified.
Tolerance is ±0.15mm unless otherwise specified

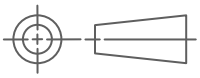

11/12/2013
©2013 Knowles Electronics

8. EXAMPLE LAND PATTERN

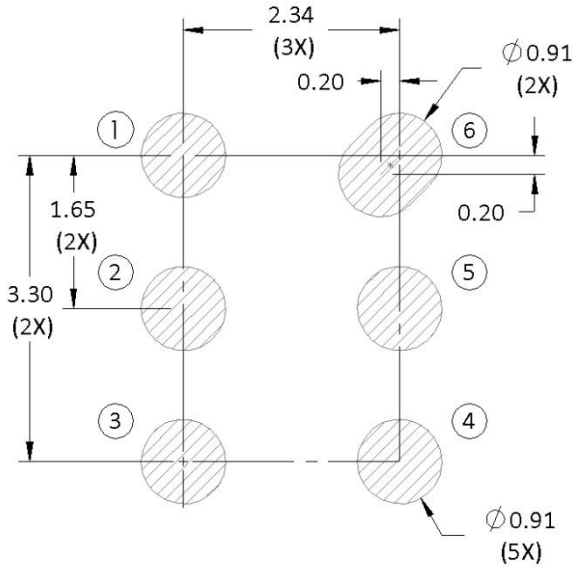

9. EXAMPLE SOLDER STENCIL PATTERN

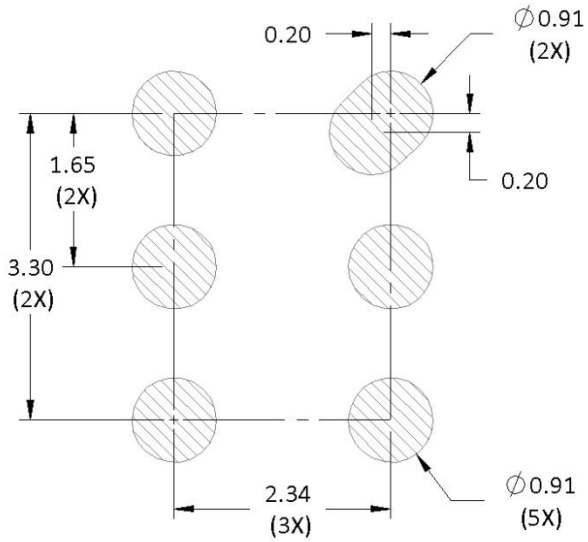

Notes: Dimensions are in millimeters unless otherwise specified.
Further optimizations based on application should be performed.

©2013 Knowles Electronics

10. PACKAGING & MARKING DETAIL

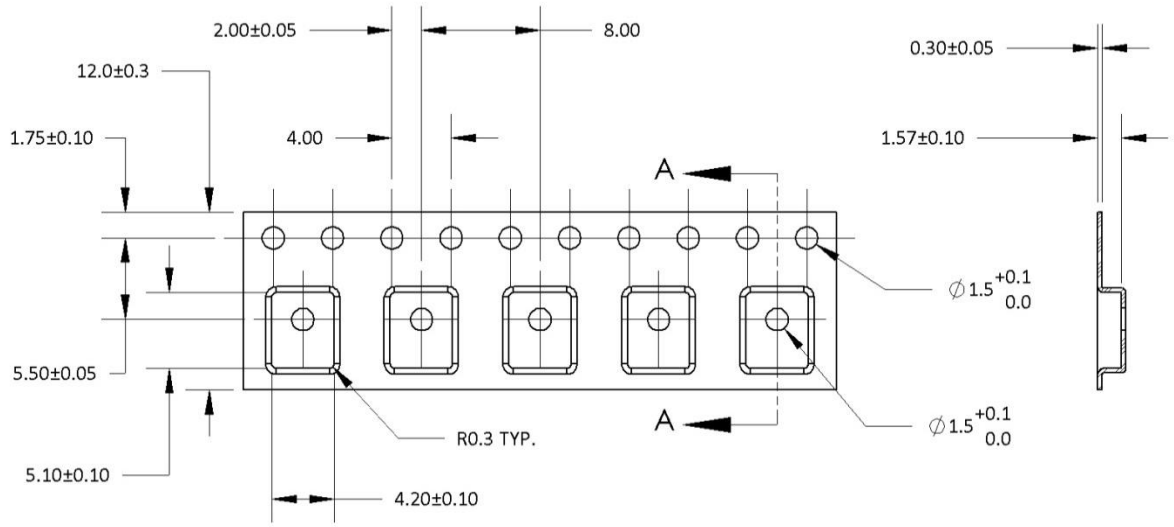

Model Number	Suffix	Reel Diameter	Quantity Per Reel
SPM0437HD4H-B	-6	13”	4,800

Pin 1

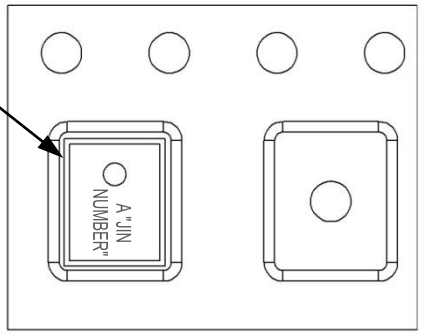

Alpha Character A:

“S”: Knowles SiSonic™ Production

“E”: Knowles Engineering Samples

“P”: Knowles Prototype Samples

“JIN NUMBER”:

Unique Job Identification Number for product traceability

Notes: Dimensions are in millimeters unless otherwise specified.

Vacuum pickup only in the pick area indicated in Mechanical Specifications.

Tape & reel per EIA-481.

Labels applied directly to reel and external package.

11/12/2013
©2013 Knowles Electronics

11. RECOMMENDED REFLOW PROFILE

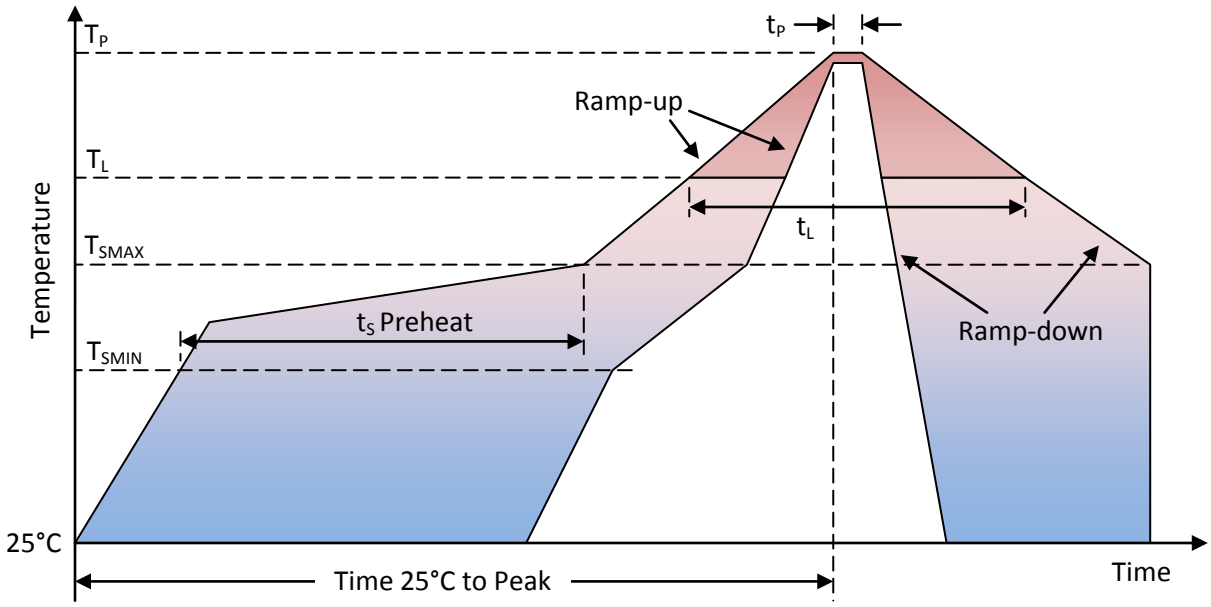

Profile Feature	Pb-Free
Average Ramp-up rate (T_{SMAX} to T_P)	3°C/second max.
Preheat • Temperature Min (T_{SMIN}) • Temperature Max (T_{SMAX}) • Time (T_{SMIN} to T_{SMAX}) (t_S)	 150°C 200°C 60-180 seconds
Time maintained above: • Temperature (T_L) • Time (t_L)	 217°C 60-150 seconds
Peak Temperature (T_P)	260°C
Time within 5°C of actual Peak Temperature (t_P)	20-40 seconds
Ramp-down rate (T_P to T_{SMAX})	6°C/second max
Time 25°C to Peak Temperature	8 minutes max

Notes: Based on IPC/JDEC J-STD-020 Revision C.
All temperatures refer to topside of the package, measured on the package body surface.

©2013 Knowles Electronics

12. ADDITIONAL NOTES

(A) Shelf life: Twelve (12) months when devices are to be stored in factory supplied, unopened ESD moisture sensitive bag under maximum environmental conditions of 30°C, 70% R.H.
(B) MSL (moisture sensitivity level) Class 1.
(C) Maximum of 3 reflow cycles is recommended.
(D) In order to minimize device damage:

- Do not board wash or clean after the reflow process.
- Do not brush board with or without solvents after the reflow process.
- Do not directly expose to ultrasonic processing, welding, or cleaning.
- Do not insert any object in port hole of device at any time.
- Do not apply over 30 psi of air pressure into the port hole.
- Do not pull a vacuum over port hole of the microphone.
- Do not apply a vacuum when repacking into sealed bags at a rate faster than 0.5 atm/sec.

13. MATERIALS STATEMENT

Meets the requirements of the European RoHS directive, 2011/65/EC as amended.

Meets the requirements of the industry-standard IEC 61249-2-21:2003 for halogenated substances and Knowles Green Materials Standards Policy section on Halogen-Free.

Ozone depleting substances are not used in the product or the processes used to make the product including compounds listed in annex A, B, and C of the “Montreal Protocol on Substances that deplete the ozone Layer.”

©2013 Knowles Electronics

14. RELIABILITY SPECIFICATIONS

Test	Description
Thermal Shock	100 cycles air-to-air thermal shock from -40°C to +125°C with 15 minute soaks. (IEC 68-2-4)
High Temperature Storage	1,000 hours at +105°C environment (IEC 68-2-2 Test Ba)
Low Temperature Storage	1,000 hours at -40°C environment (IEC 68-2-2 Test Aa)
High Temperature Bias	1,000 hours at +105°C under bias (IEC 68-2-2 Test Ba)
Low Temperature Bias	1,000 hours at -40°C under bias (IEC 68-2-2 Test Aa)
Temperature / Humidity Bias	1,000 hours at +85°C/85% R.H. under bias. (JESD22-A101A-B)
Vibration	4 cycles of 20 to 2,000 Hz sinusoidal sweep with 20 G peak acceleration lasting 12 minutes in X, Y, and Z directions. (Mil-Std-883E, method 2007.2 A)
ESD-HBM	3 discharges of ±2 kV direct contact to I/O pins. (MIL 883E, Method 3015.7)
ESD-LID/GND	3 discharges of ±8 kV direct contact to lid while unit is grounded. (IEC 61000-4-2)
ESD-MM	3 discharges of ±200 kV direct contact to I/O pins. (ESD STM5.2)
Reflow	5 reflow cycles with peak temperature of +260°C
Mechanical Shock	3 pulses of 10,000 G in the X, Y, and Z direction (IEC 68-2-27, Test Ea)

Note: After reliability tests are performed, the sensitivity of the microphones shall not deviate more than 3 dB from its initial value.

©2013 Knowles Electronics

15. SPECIFICATION REVISIONS

Revision	Specification Changes	Date
A	Initial Release (C10115114)	7/25/13
B	Update P/N on Page 1, update §5 diagram, correct ESD-HBM and ESD-MM (C10115409)	11/12/13

Information contained herein is subject to change without notice. It may be used by a party at their own discretion and risk. We do not guarantee any results or assume any liability in connection with its use. This publication is not to be taken as a license to operate under any existing patents.

©2013 Knowles Electronics